ISSN: 2688-8645

Electrical System Design of Microtome

Shenghong Wu[1,*], Jingliang Xie[1] and Hao Jiang[1]

[1]School of Nuclear Technology and Automation Engineering, Chengdu University of Technology, Chengdu 610059, China.

Abstract

With the development of science and technology, application and foam cutting machine in the processing industry is now more widely. This paper is this paper introduces the structure and working principle of the program controller foam cutting machine, a PLC control foam automatic slicing processing controller is designed. Foam is consists of a large number of microporous gas liquid dispersion in solid plastic to form a kind of high polymer material, which has the characteristics of lightweight, heat insulation, sound-absorbing, shock and and dielectric properties superior to the base resin, a wide range of uses. Almost all kinds of plastic can be made into foam, foaming molding has become an important area of plastic processing. Main design automatic slicing controller hardware circuit diagram, control program block diagram, and the selection of analysis and design of some related components and PLC. The design of the foam automatic slicing machine main operation object is industrial plastic foam, the is automatic control technology, from the production, basically realized foam cutting machine in the production process automation. Compared with the previous manual slicer has obvious improvement in efficiency.

Keywords

Foam, semi-automatic control, automatic control, slicing machine, programmable controller.

1. Introduction

LTCC [1-2] technology is a new multi-layer substrate technology which appeared in the mid-1980s. It was first developed by K in the United States, initially applied to military products, and later applied to information products by European manufacturers. At present, LTCC technology has entered the stage of industrialization, serialization and material design in developed countries such as Japan and the United States. The so-called LTCC technology (Figure 1) is to cast low-temperature sintered ceramic powder into green ceramic tape, and then make passive integrated components of three-dimensional circuit network by slicing, punching, through hole filling, screen printing, lamination, sintering and other processes, and also make three-dimensional circuit substrate with built-in passive components, on whose surface active devices can be mounted to make passive active integrated functional modules. As a new integral and component technology, substrate technology has become the first choice for the integration and modularization of electronic components in the future.

With the continuous development of industrial control technology, the performance-price ratio of programmable controller is getting higher and higher. Stepping motor is controlled by pulses, and the displacement depends on the number of pulses. PLC has the functions of pulse output and pulse control, so it is easy for PLC and stepping motor to realize position control function. PLC controls the stepping motor to form open-loop control to realize accurate feeding [3-4]. Foreign slicer manufacturers are: RC+STU automatic slicer of UHT Company of Japan; SC-1 semi-automatic slicer from KEKO Company of Slovenia and BF-200 semi-automatic slicing and framing machine from PTC Company of America. The RC+STU automatic slicer of UHT company

ISSN: 2688-8645

in Japan adopts PLC+ man-machine interface integrated control mode [5-6], with chain cutting function and fast slicing speed, which can meet both on-line production and single machine production. SC-1 semi-automatic slicer from KEKO Company of Slovenia adopts pneumatic conveying and slicing, and the slicing slides into the magazine automatically, without blanking function. BF-200 semi-automatic slicing and framing machine [7] can automatically peel off the cool film on the back of the green porcelain tape, and then cut it into green porcelain pieces with a certain size according to the requirements, which are absorbed to the sticky metal frame by vacuum.

2. Hardware Circuit Design of the System

2.1. Design Scheme of PLC System

PLC is a computerized high-tech product, and its price is relatively high compared with relay. Therefore, before applying PLC, we should first consider whether it is necessary to use PLC. If the controlled system is simple, with few I/O points, or if there are many I/O points, but the control requirements are not complicated, and there are few interconnections among all parts, relay control can be considered instead of using PLC.The general design steps of PLC control system can be divided into the following steps: familiarizing with control objects, selecting PLC and determining hardware configuration, designing external wiring of PLC, designing control program, debugging program and compiling technical documents. The design process is as follows:

The slicing process is as follows: firstly, put the foam block on the tabletop; secondly, the tabletop retreats to a limited position; thirdly, the knife rest moves down to a certain position and locks; thirdly, the tabletop drives the foam block to move forward to a limited position; thirdly, the knife rest moves down to slice and rotate to cut a sponge with a certain thickness; thirdly, the tabletop moves back to the limit, while the knife rest moves to the initial position. Repeat the above process.

2.2. Design of Main Circuit

According to the control requirements of microtome. There are 5 motors in the drawing, the band saw circuit drives the blade to rotate, and the cutting power of foam is small, so it can be controlled by an AC contactor KM2. The mesa motor is a DC motor (plastic, controlled by AC contactor KM1; Two sharpening motors drive the grinding wheel to grind the blade, so as to keep the blade sharp, because its direct current is supplied by thyristor DC speed regulating device), drive the tabletop to move forward or backward; The tool rest motor decelerates through the turbine/scroll rod transmission mechanism to drive the left and right screw rods to rotate forward or backward, and the tool rest moves up or down with the sliding sleeve. Because the tool rest must stop accurately, its braking adopts electromagnetic braking.

2.3. Contactor

In various departments of industry, agriculture and transportation, various production machines are widely used, which are generally driven by motors, and the motors are controlled by various control methods, the most common of which is relay contactor control. Relay contactor control is a control circuit composed of various contact relays, contactors, buttons, travel switches, etc., to realize the control of starting, braking, reversing and speed regulation of electric drive system; Realize the protection of electric drive system and the automation of production and processing. Different kinds of production machinery have different technological processes and different control circuits. Nevertheless, any control circuit is composed of some simple basic control links. The electrical control system is composed of many electrical components connected according to certain requirements.

ISSN: 2688-8645

With the development of production, the capacity, movement speed and movement frequency of controlled objects are increasing, and the moving parts are increasing. It is required to realize interlocking control and remote centralized control among the moving parts. Obviously, manual control appliances can not meet these requirements, so automatic control appliances, such as contactors and relays reflecting various signals, are needed.

Contactor is an automatic control electrical appliance that can automatically turn on or off the main circuit with load under the external input signal. It is an electrical appliance that uses electromagnetic force to open or close the switch. It is suitable for high-current circuits with frequent operation and long distance control, and has the advantages of low-voltage release protection, reliable operation, long service life and small size. Contactor is one of the most important and commonly used components in relay-contact control system. When the button is pressed, the coil is electrified, the static iron core is magnetized, and the iron core is sucked up, driving the rotating shaft to close the contact, thus connecting the circuit. When the button is lowered, the circuit is broken.

3. Ladder Diagram Programming

This program consists of signal detection, external output, manual control and automatic control.

1. signal detection

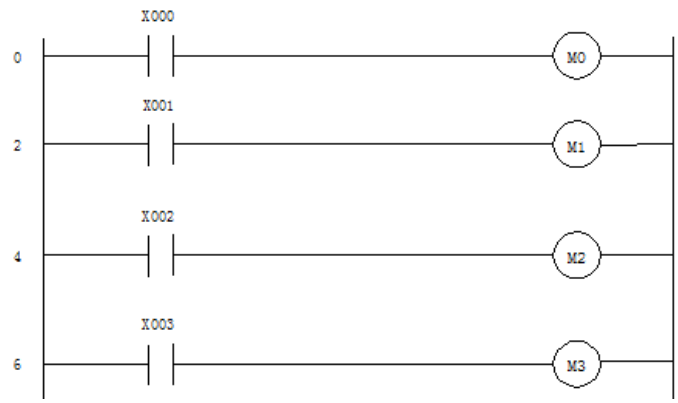

Figure 1. Procedure steps 0-6

2 External output

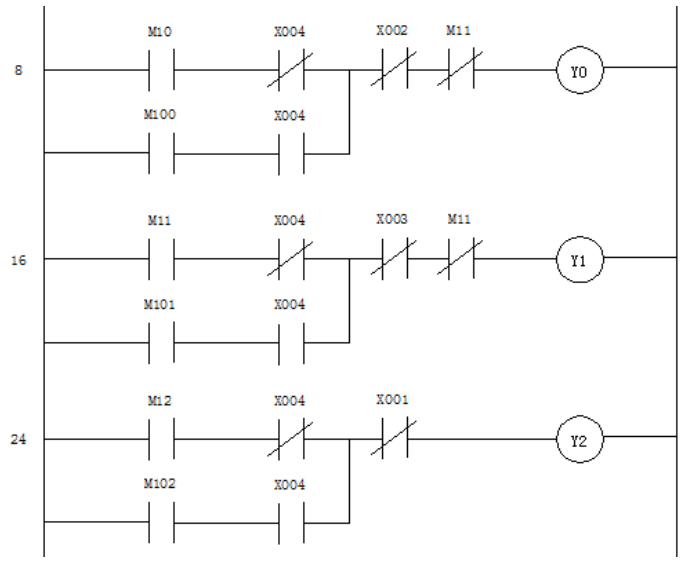

ISSN: 2688-8645

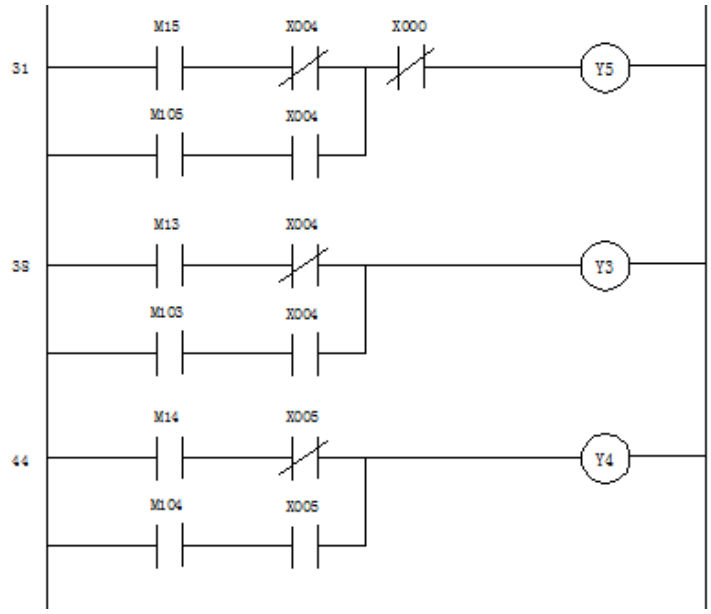

Figure 2. Steps 8-44 of the program

Steps 8-44 of the program are external output. Output according to X4 (normally closed manual/normally open automatic) status. Because the forward and backward movement of the platform cannot be output at the same time, otherwise a short circuit will occur, so it will interlock in the program. In addition, due to the consideration of necessary protection measures, the signal of its external thermal relay device is connected to PLC.

3. Manual control

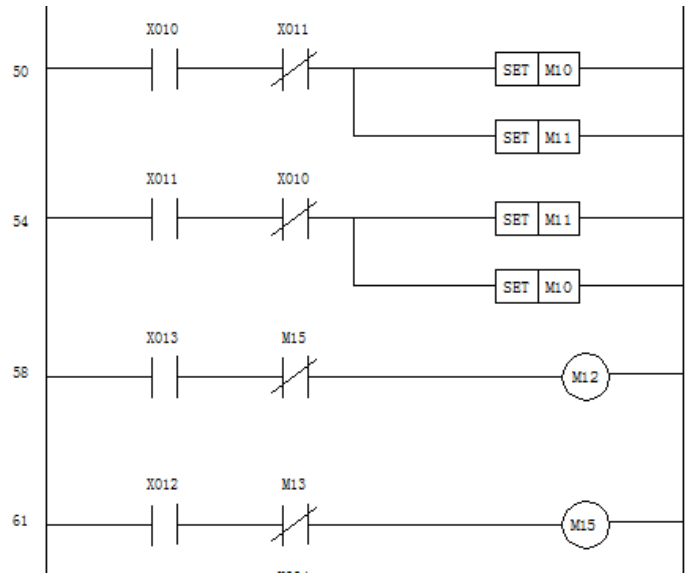

Figure 3. Procedures 50-61

Procedures 50-61 are manual control. Because the platform moves forward and backward under the control of the motor, the moving position can be controlled by inching, so inching can be used. Self-locking should be used when the platform moves forward and backward, and when the tool rest lifts and falls.

ISSN: 2688-8645

4. Conclusion

In this paper, a processing control system of foam slicer based on PLC is designed. The hardware circuit diagram, control program block diagram and ladder diagram of foam chip control system are designed, and some related components and PLC are selected and analyzed. In the design process, we have a further understanding of the function, principle and instruction application of PLC, and at the same time, we have combined the knowledge of low-voltage electrical appliances, electric drive and other aspects, and learned that PLC has high reliability and the average time to failure can exceed 20,000 hours; The program design is easy, and the program can be saved and solidified; Small size and low price; Expand on the basic system, the system is easy to configure, the farthest distance from the load can reach 10,000 feet, and the memory can be expanded; Strong communication function, can be connected with a variety of supporting equipment; Systematic, with standard peripheral interface module, etc.

Acknowledgements

Natural Science Foundation.

References

[1] Bin S , Yazhen W , Yuewen H , et al. Adjustment of Co-firing Shrinkage Rate of LTCC Internal Electrode Conductive Silver Paste[J]. Journal of Jianghan University(Natural ence Edition), 2019.

[2] Lin L , Mingsheng M , Faqiang Z , et al. Fabrications and Performance of Wireless LC Pressure Sensors through LTCC Technology[J]. Sensors, 2018, 18(2):340-.

[3] Biyi Li. Research on Motion Control Technology of Stepping Motor Based on PLC Pulse Control [J]. South agricultural machinery, 2018, 049(009):188.

[4] Haijun Zhang. Method for accelerating S-shaped curve of stepping motor based on PLC [J]. Shandong industrial technology, 2018.

[5] Xiaoyan Li. Research and development of PLC control system for automatic microtome [D]. xidian university, 2010.

[6] Zhao R , Li Y , Huang H , et al. Application of Blended Teaching in Hydraulic Pneumatic Transmission and Control Course Based on MOOC and FanYa Platform[C]// Proceedings of the 2019 International Conference on Advanced Education Research and Modern Teaching (AERMT 2019). 2019.

[7] Räsänen, J. E, Neittaanmäki, N, Ylitalo L , et al. 5-aminolevulinic acid nanoemulsion (BF-200 ALA) is more effective than methyl-5-aminolevulinate (MAL) in daylight photodynamic therapy for actinic keratosis: A non-sponsored randomized double-blind multicentre trial[J]. British Journal of Dermatology, 2018.