ISSN: 2688-8645

Research on Conflict Resolution Mechanism of Optical Burst Switching Networks

Hehe Chen[1,*]

[1]Department of Electronic and Electrical Engineering, Wenzhou Polytechnic, Wenzhou 325015, China

Abstract

At present, optical switching technologies mainly include optical circuit switching (OCS), optical packet switching (OPS) and optical burst switching (OBS). OBS is a promising switching mode that combines the advantages of OCS and OPS while overcoming their disadvantages. This paper introduces the concept of OBS, and discusses the most critical technology of OBS – the burst contention, especially expounds the contention resolution of OBS network.

Keywords

Optical burst switching; Optical packet switching; Optical circuit switching; Fiber delay line; Contention resolution.

1. Introduction

With the continuous development of communication technology, optical networks are getting more and more attention due to their huge bandwidth potential and efficient transmission performance Note.

With the application of optical Wavelength Division Multiplexing (WDM) and Dense Wavelength Division Multiplexing (DWDM) [1], the transmission capacity of optical fiber has been greatly improved. Now the transmission speed of single Wavelength optical channel has reached the order of T bits[2-3]. Therefore, only optical network can effectively provide solutions for the explosion like business growth. In the current IP over SDH scheme widely used, data still needs to be converted between O/E/O at network nodes, which limits the overall switching rate of the network. Therefore, the bottleneck of providing high-speed data transmission in the communication network is transferred to the switching system. Optical switching network has become one of the core technologies of the next generation optical Internet.

2. Optical Switching Technology

2.1. The Principle of OBS

Optical switching technology mainly includes optical circuit switching (OCS), optical packet switching (OPS) and optical burst switching (OBS). OCS is a connection-oriented switching technology that consists of connection request, connection establishment, and connection release. It is similar to traditional circuit switching. When data is transmitted, an optical wavelength channel needs to be monopolized, and an optical connection needs to be established before data transmission, and the connection needs to be released after transmission.

Similar to electrical Packet Switching technology, OPS (Optical Packet Switching) [4] uses fixed-length time slots for its data and Packet headers to be transmitted together, and its transmission and storage are all-optical. OPS can realize statistical reuse, with relatively high bandwidth

ISSN: 2688-8645

utilization, and can be better suitable for burst data transmission like IP. Although the development of OCS is relatively mature, it cannot adapt to sudden data transmission such as IP very well. While OPS, although with an ideal prospect, is still in the theoretical and experimental stage, and there is still a big gap from the practical application. In view of this, a new switching technology between OCS and OPS, OBS (Optical Burst Switching), is proposed [5], which has attracted the attention of scientific researchers from various countries.

2.2. Optical Burst Switching Networks

Figure 1 shows the basic topology of an OBS network. It can be seen from the figure that OBS network is composed of core node, edge node and WDM link. In order to improve the compatibility of OBS networks with other types of networks, edge nodes provide various network interfaces for OBS networks and other networks. According to the burst packet destination address, service level and other information, the entry edge node classifies IP packets and encapsulates them into BDP. At the same time, BCP is generated and then sent to the adjacent OBS core node. The exit edge node unpacks the BDP received into IP packets and sends the IP packets to other networks or terminals. The core nodes forward and exchange the corresponding BDP according to the routing information in BCP. In addition to BCP, BDP does not require O/E/O conversion at the core nodes, and the whole switching and transmission process takes place in the optical domain, thus increasing the switching rate.

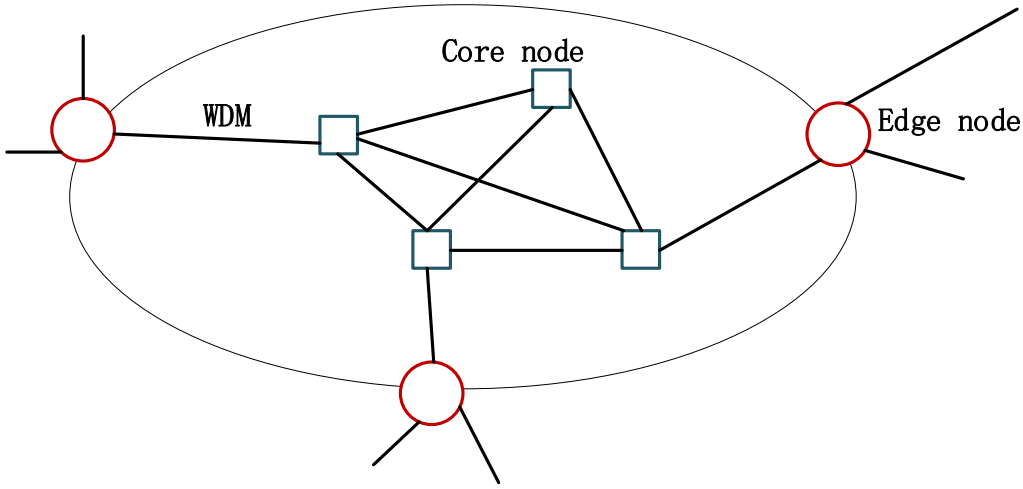

Figure 1. The Structure of OBS Network

In OBS network, burst packet is the basic switching unit of OBS network, including BDP (Burst Data Packet) and its corresponding BCP (Burst Control Packet). As shown in Figure 2, BCP needs to enter the OBS core switching network before BDP, and allocate wavelength resources for its corresponding BDP at the core switching node. BCP control information is generally processed in the electrical domain, while BDP does not require O/E/O conversion, and carries out all-optical transmission directly on the end-to-end data channel. It should be emphasized that in the process of data transmission, the OBS source node can immediately send BDP without waiting for a reply after sending BCP for a period of time, and the interval between BCP and BDP is called the offset time.

In addition, in the process of data transmission, the physical transmission channel used by BCP and BDP is separated, with BCP occupying the control channel and BDP the data channel. To a great extent, this method can simplify the data processing process and realize all-optical data exchange in nodes.

ISSN: 2688-8645

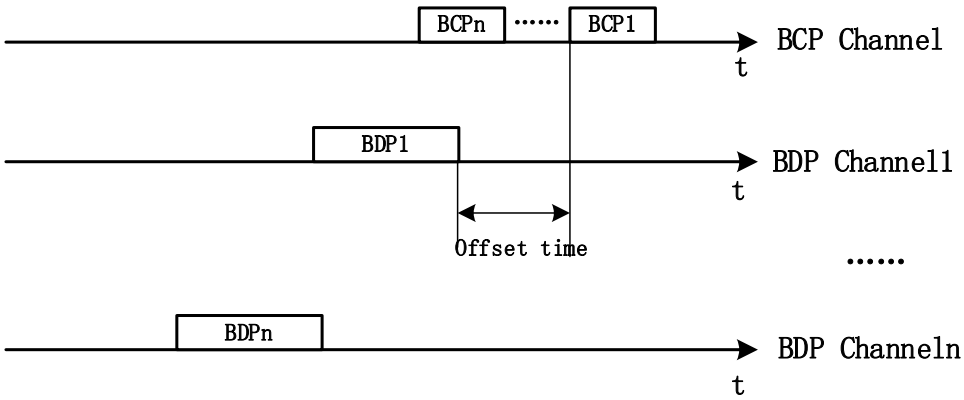

Figure 2. Schematic Diagram of BDP and BCP Transmission in OBS Networks

3. Burst Contention in OBS Networks

In a packet switch, when multiple packets are going to the same output port at the same time, a "Burst Contention" occurs, known as an "external blocking". To solve the conflict problem of such burst packets, we can cache all the burst packets and choose to send one of the data. In OBS network, the burst packet adopts one-way resource reservation protocol, that is, BCP does not need connection establishment confirmation, and it allocates wavelength resources for its corresponding BDP at the core switching node of OBS network. Since BCP enters the OBS core switching network before BDP, if multiple BCP have allocated the same wavelength channel for their corresponding BDP at the same time, the conflict caused by competing wavelength resources in the core switching node is likely to occur. As shown in FIG. 3, a BCP first reserves the wavelength channel Ci for its corresponding BDP. We call this burst packet as the Original Burst. At the same time, in the ti and t i+ 1, another BCP as well as its corresponding BDP reserved this wavelength channel, then the latter will occur due to competition with the former article i wavelength channel conflict caused by data, the paper said after the contention package for contention package (Contending Burst).

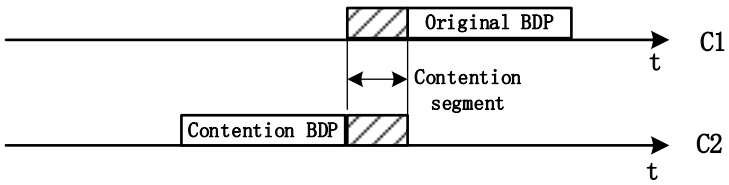

Figure 3. The Contention between the Original Burst and the Contention Burst

At present, the solutions to Burst packet competition in OBS networks mainly include optical cache , wavelength conversion , offset routing and Burst packet segmentation [6].

3.1. FDL (Fiber Delay Line)

In OBS networks, because BDP does not perform O/E/O conversion, all-optical caching must be used. At present, practical optical caches can only be implemented by FDL (Fiber Delay Line) . There is a delay in the propagation of light in the fiber, so different lengths of FDL can be used to achieve the purpose of data cache. FDL delays some BDP and improves bandwidth utilization, thus improving the performance of the whole OBS network.

However, there are some problems with FDL. Firstly, FDL cannot be used as an optional time delay. Once the optical signal enters the fiber, it must go through the whole fiber, so FDL lacks

ISSN: 2688-8645

flexibility in time. In addition, every 0.1ms delay requires about 20km of optical fiber, which greatly increases the volume and cost of OBS nodes. At the same time, fiber amplifiers are needed to compensate for the power loss caused by FDL, which will introduce negative effects such as noise and distortion.

3.2. Wavelength Conversion

The large wavelength space of WDM can provide another OBS conflict resolution method, that is, using wavelength converters to convert the wavelength of optical channel carrying conflict packets to the idle wavelength channel to solve the contention problem.

Because the wavelength conversion method does not require optical amplifier and has low insertion loss, it is convenient to improve the performance of OBS network and has certain advantages. However, due to the high price and implementation cost of the full-optical tunable wavelength converter, the conflict resolution efficiency of the wavelength conversion method is insufficient in the case that the OBS network traffic is large and it is difficult to find the idle wavelength channel.

3.3. Deflection Routing

In OBS core nodes without FDL, deflection routing is an effective method to resolve conflicts. The principle of deflection routing is: in case of conflict, check whether the core node has a free port, and if so, exchange the burst conflict packet to the free port for output, thus reducing data loss[7]. With simple implementation and low cost, deflection routing has a significant effect on resolving conflicts in some small OBS networks with good connectivity and light load. However, in OBS networks with poor network connectivity and large traffic volume, due to limited routing and limited free ports, the conflict resolution effect of deflection routing will be somewhat reduced.

3.4. Burst Segmentation

BS(Burst segmentation) refers to the segmentation of burst data into multiple data segments. When contention occurs, only the conflicting data segments are lost, rather than the whole burst data. In this way, the data loss rate can be minimized.

BS measures are generally divided into two types, namely tail segmentation and head segmentation [8], as shown in FIG. 4 and FIG. 5, respectively. The former divides and drops the tail of the original burst packet. When two burst packets collide in the Ci wavelength channel, the overlapped part of the two burst packets at the same time is divided and discarded. However, it can be seen from the data format of the BDP that it consists of several IP packets, and when the split part is in the middle of an IP packet, the IP packet shall be discarded completely. The latter is to divide and discard the head of the competing burst packet. In other words, when two burst packets collide in Ci wavelength channel, the head of the competing burst packet and the original burst packet overlap in time are segmented and discarded.

The advantage of split burst packet tail is that the header information can be preserved, and the discarded part can be retransmitted to reduce data loss, so that the destination node can be delivered sequentially. However, the problem of tail segmentation is that the BCP forwarding time corresponding to burst packet may be before the packet is discarded, because it still carries the original length message of burst packet, etc., subsequent nodes will not be informed that the burst packet has undergone segmentation processing. If head segmentation is adopted, the probability of the packet arriving at the destination node is increased, the control information of burst packets will need to be modified in addition. However, the advantage of header segmentation is to ensure that once a burst packet arrives at the destination node without conflict, it can ensure that the channel is not preempted by subsequent burst packets and it can pass through the node smoothly.

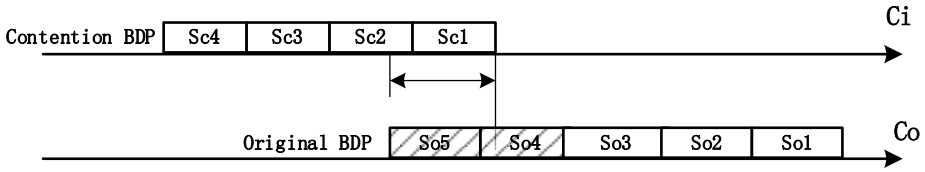

Figure 4. Diagram of the Method to Segment the Tail of a Contention BDP

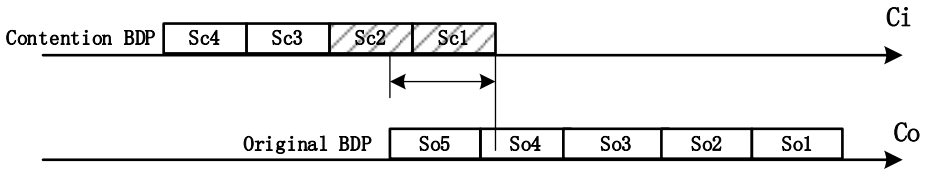

Figure 5. Diagram of the Method to Segment the Head of a Contention BDP

4. Conclusion

OBS is a very promising optical switching technology that combines the advantages of OCS and OPS while avoiding their disadvantages. Its characteristics are that the control and data are separated in time and space, the control group is sent in advance, and the data group is processed by the electrical information at the intermediate node, and the corresponding resources are reserved for the data group, while the data group is transmitted after the control group, and through the reserved resources at the intermediate node, there is no need for optical/electric/optical processing. As a result of adopting one-way reservation mechanism, OBS network bandwidth utilization is high, flexible, and does not need optical cache, so it is relatively easy to implement. It has the characteristics of small delay (one-way reservation), bandwidth utilization (statistical reuse), high efficiency, flexible exchange, transparent data, large exchange capacity (electronic control optical exchange) and so on. With the development of fast wavelength conversion technology, optical burst switching will become the core of all-optical switching network.

References

[1] Beyranvand H, Salehi J A. Efficient optical resource allocation and QoS differentiation in optical burst switching networks utilizing hybrid WDM/OCDM[J]. Lightwave Technology, Journal of, 2012, 30(15):2427-2441.

[2] Patel K A, Dynes J F, Lucamarini M, et al. Quantum key distribution for 10 Gb/s dense wavelength division multiplexing networks[J]. Applied Physics Letters, 2014, 104(5): 051123.

[3] Zhao Q, Yin H. Performance analysis of dense wavelength division multiplexing secure communications with multiple chaotic optical channels[J]. Optics Communications, 2012, 285(5): 693-698.

[4] Reza S E, Ahsan N, Ferdous S, et al. Analyses on the Effects of Crosstalk in a Dense Wavelength Division Multiplexing (DWDM) System Considering a WDM Based Optical Cross Connect (OXC)[J]. International Journal of Scientific & Engineering Research, 2013, 4(1).

[5] Suk H Y, Sun H G, Yong J J, et al. 1-Tb/s (100/spl times/12.4 gb/s) transmission of 12.5-GHz-spaced ultradense WDM channels over a standard single-mode fiber of 1200 km[J]. IEEE Photonics Technology Letters, Mar.2005, 17(3): 696-698.

[6] Baldine I, Rouskas G N, Perros HG, et al. Jump start: a just-in-time signaling architecture forWDM burst-switched networks[J]. IEEE Communications, 2002, 40(2):82- 89.

ISSN: 2688-8645

[7] Vokkarane VM, Jue J P, Sitaraman S. Burst segmentation: an approach for reducing packet loss in optical burst switched networks[J]. IEEE International Conference on Communications, 2002(5): 2673- 2677.

[8] Chen Y, Hamdi M, Tsang D HK. Proportional QoS over OBS networks[J].IEEE GLOBECOM, 2001(3): 1510- 1514.