ISSN: 2688-8645

Design of Intelligent Vacuum Cleaner

Yong Liu, Xueqin Rong, Shupo Bu

Department of Electronic and Communication Engineering, Suzhou Institute of Industrial Technology, China

Abstract

With the development of science and technology and the progress of society, intelligent home appliances are more and more popular for modern families. Intelligent vacuum cleaner, also known as sweeping robot, is a comprehensive system which combines sensor technology, positioning technology, computer algorithm technology, decision planning technology, intelligent control execution technology and other technologies. It can realize line identification, obstacle avoidance and navigation, intelligent cleaning, route planning and other functions in the case of no control, upgrade the ordinary vacuum cleaner to intelligent vacuum cleaner, greatly improve the intelligent degree of vacuum cleaner, and liberate human from the simple and boring housework of sweeping the floor.

Keywords

Stc89c52rc, tracking obstacle avoidance, ultrasonic, intelligent vacuum cleaner.

1. Introduction

In today's society, how to free human beings from the tedious daily things? At this time, intelligent household appliances emerge as the times require. The intelligent vacuum cleaner introduced in this paper is one of them. It initially realizes the autonomous work in the case of no-one operation. As one of the most widely used service equipment, vacuum cleaner brings a lot of convenience to our daily life and is an indispensable part of our life. But now the operation of manual vacuum cleaner largely limits the efficiency of electrical appliances. Therefore, it provides an opportunity for the development of cleaning robot, and the development of cleaning robot also drives the development of service robot industry, and promotes the development of mobile robot technology, voice and image recognition technology and sensor.

2. System Design

The intelligent vacuum cleaner mainly includes the core part of single chip microcomputer, infrared remote control part, line identification part, obstacle avoidance part, dust collection motor control part and power supply part. The infrared remote control part realizes the remote control function, the line identification part realizes the obstacle avoidance function, and the dust collection motor control part realizes the garbage cleaning function. The block diagram of the system is shown in Figure 1.

ISSN: 2688-8645

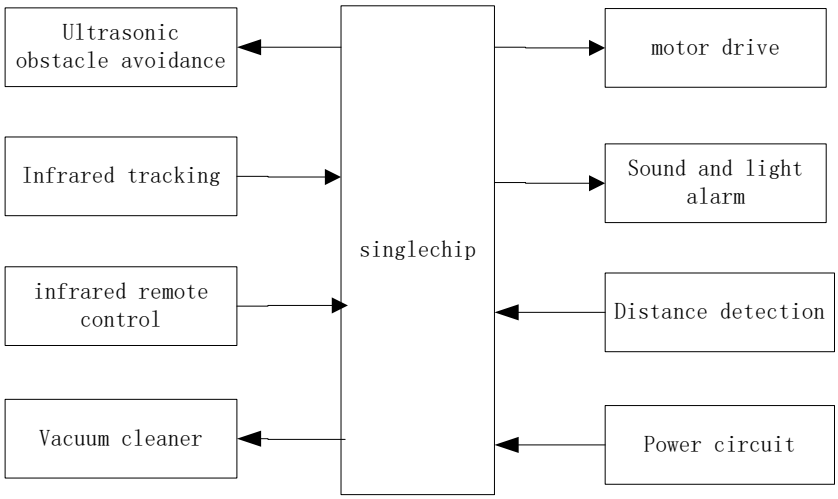

Figure 1. System structure diagram

3. System Hardware Design

3.1. Intelligent Tracking Circuit

Tcrt5000 infrared photoelectric sensor is selected as the intelligent tracking sensor in the design. This part of the circuit is to realize the black line recognition function, which is completed by the absorption principle of the black line to the infrared signal.

Tcrt5000 sensor can stably detect the existence of 25 mm black line. Therefore, tcrt5000 infrared photoelectric sensor is more commonly used in the tracking circuit of model sweeping robot. Its tracking function is stable and its anti-interference ability is strong. Although tcrt5000 infrared photoelectric sensor has strong anti-interference ability, it still needs to be equipped with LM339 voltage comparator as the tracking signal setting device, In the circuit, 5V voltage is used to supply power to the transmitting end of tcrt5000, and 150 ohm fixed resistance in series is used to form the tracking signal transmitting circuit. The tracking signal is connected to the input positive terminal of LM339, and the input negative end is connected with the contrast signal composed of 10K adjustable resistance. The stable black line tracking can be obtained through field debugging Two tcrt5000 infrared photoelectric sensor tracking circuits are installed at both ends of the vehicle head of the sweeping robot to realize the black line tracking function of the sweeping robot. The black line tracking circuit is shown in Fig. 2.

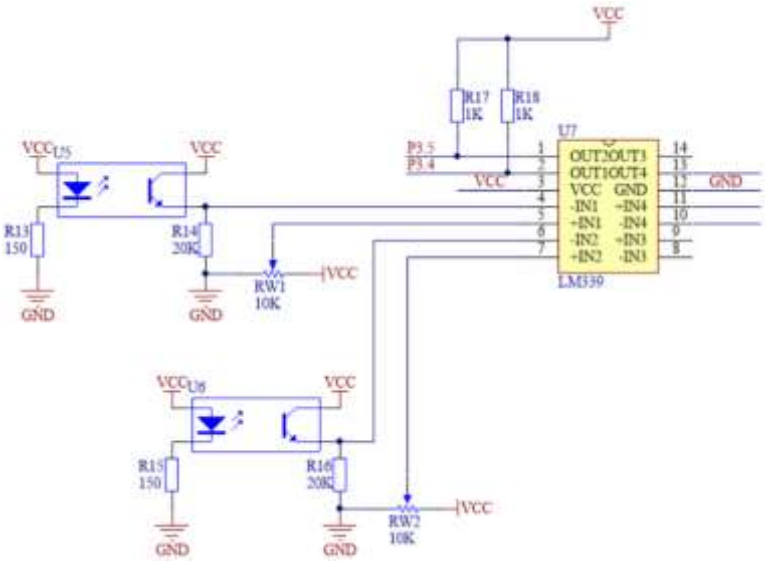

Figure 2. Black line tracking circuit

ISSN: 2688-8645

3.2. Intelligent Obstacle Avoidance Circuit

The intelligent obstacle avoidance circuit composed of infrared pair tube needs to be equipped with LM339 voltage comparator as the setting device of obstacle avoidance signal, and the principle of infrared reflection obstacle avoidance is used.

In the design, the infrared tube is a conventional infrared tube with 940nm wavelength. The current power consumption of the infrared tube is 30mA. 5V voltage is used to supply power and 100 ohm constant resistance is used in the circuit to form the infrared transmitting circuit. The infrared receiving circuit is composed of the infrared receiving tube and 22K constant resistance in series, because the output level signal of the infrared receiving circuit fluctuates greatly The LM339 voltage comparator is added as the conditioning circuit of the infrared obstacle avoidance signal. The output signal of the infrared receiving circuit is connected to the input positive end of LM339, and the input negative end is connected with the contrast signal composed of 10K adjustable resistance. Through the field test, the stable obstacle avoidance signal can be identified. Two avoidance devices are installed at both ends of the robot head The intelligent obstacle avoidance circuit is shown in Fig. 3.

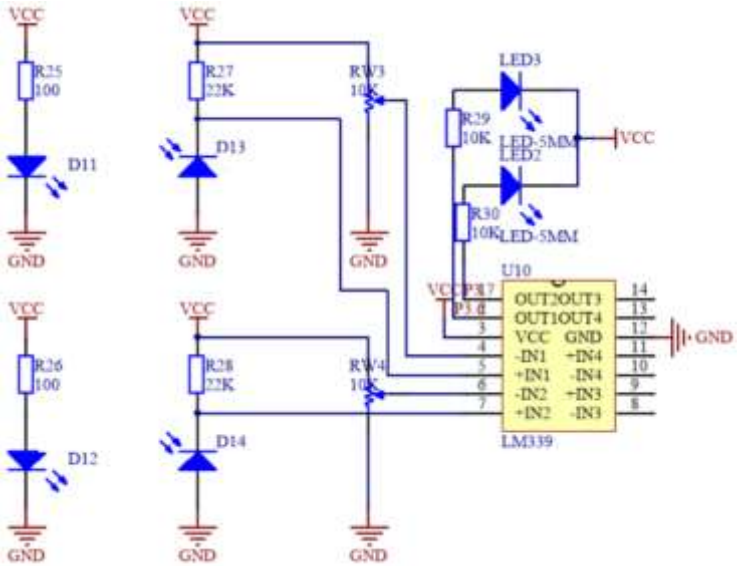

Figure 3. Infrared obstacle avoidance circuit

3.3. Motor Drive Circuit

The motor driving chip of intelligent sweeping robot adopts L293D motor driving chip. The chip can realize the voltage up to 46v and the output current can reach 2A. The four-way Darlington tube is built-in, with four-way driving signal output, which can realize the forward and reverse drive of two-way motor. Because the electromotive force interference will occur when the motor drives, the design adds the freewheeling two-pole The tube filters out these interference signals to ensure the stability of the circuit operation. Electrolytic capacitor and ceramic capacitor are added to the power supply end of l2933d to make the power supply more stable. The motor drive circuit is shown in Fig. 4.

ISSN: 2688-8645

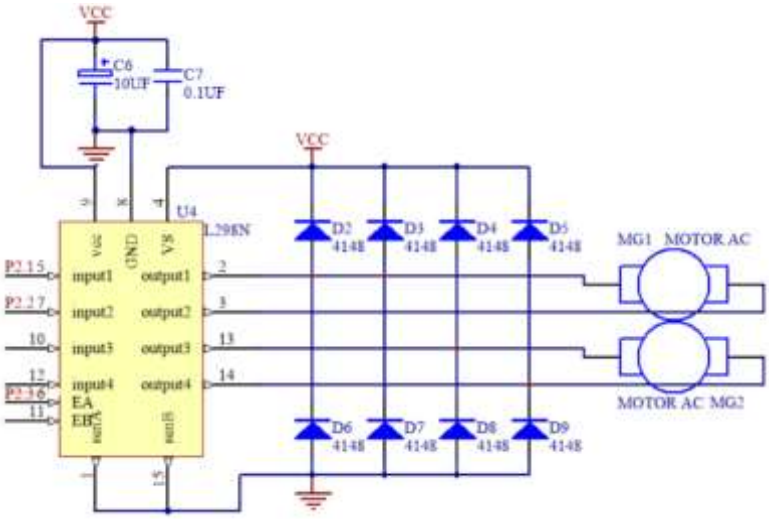

Figure 4. Motor drive circuit

3.4. Ultrasonic Ranging Transmitting Circuit

In addition to infrared obstacle avoidance, the system also has ultrasonic obstacle avoidance function. Hc-sr04 ultrasonic distance measurement module uses 5V power supply, and its module pins include power supply and ground, feedback signal pin ECHP and start signal pin trig. Hc-sr04 ultrasonic distance measurement module can achieve 0 ~ 5m distance measurement, and the measurement accuracy can reach 0.2cm. Hc-sr04 ultrasonic distance measurement module uses t TL level communication mode is more convenient when connected with 51 single-chip microcomputer. Two control pins of hc-sr04 ultrasonic ranging module are connected to IO port of single-chip microcomputer. The MCU sends start signal to trig trigger hc-sr04 to send ultrasonic signal. After signal feedback, it will be fed back by ECHP pin. By calculating the time difference from start signal to feedback signal, the overrun can be calculated The circuit design of the ultrasonic module is relatively simple for the distance value collected by the acoustic ranging module. It only needs to supply power and connect the control pin to the IO port of the MCU. The interface circuit of the ultrasonic module is shown in Figure 5.

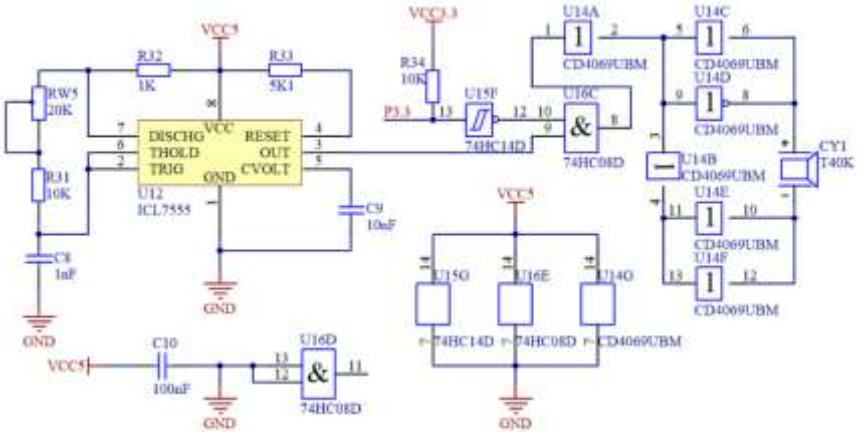

Figure 5. Ultrasonic transmitting module circuit

3.5. Ultrasonic Ranging Receiving Circuit

The ultrasonic ranging receiving circuit is mainly composed of a 40KHz decoding chip cx20106a, ultrasonic receiving tube Cy2, potentiometer rw6, charging capacitor, etc. It receives the signal sent by the ultrasonic transmitting tube Cy2 which is connected to the chip cx20106a pin. The two pins of the chip cx20106a control their own detection frequency through an external RC

ISSN: 2688-8645

oscillation circuit. Finally, the chip cx20106a outputs a signal to the p3.2 pin of the single chip microcomputer.

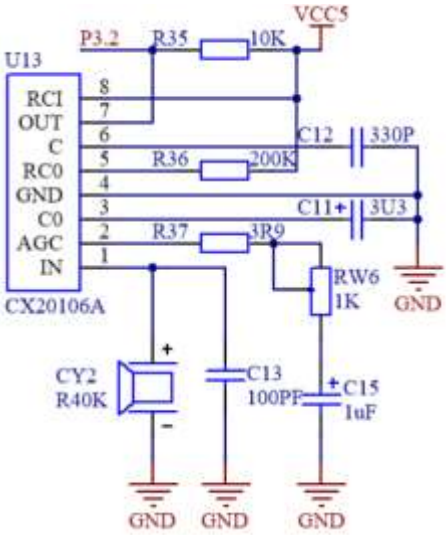

Figure 6. Ultrasonic receiving module circuit

3.6. Control Circuit of Dust Collecting Motor

Bta24 silicon controlled rectifier is used to control the dust collecting motor of the system. It is very simple to use. As long as the TTL level at the control end is driven by the optocoupler, the SCR switch can be realized. When using, it can be driven by PNP type triode connected with voltage follower. Moc3022 is used to isolate the AC high voltage and DC low voltage control signals on the thyristor. When the single-chip microcomputer output control signal is low, the thyristor works and the motor works. When the single-chip microcomputer output control signal is high-level, the thyristor turns off and the motor does not work. PWM signal is output by the single-chip microcomputer to control the silicon controlled circuit to realize the adjustment of the working power of the dust cleaning motor. The control circuit diagram of the dust suction motor is shown in Figure 7 below.

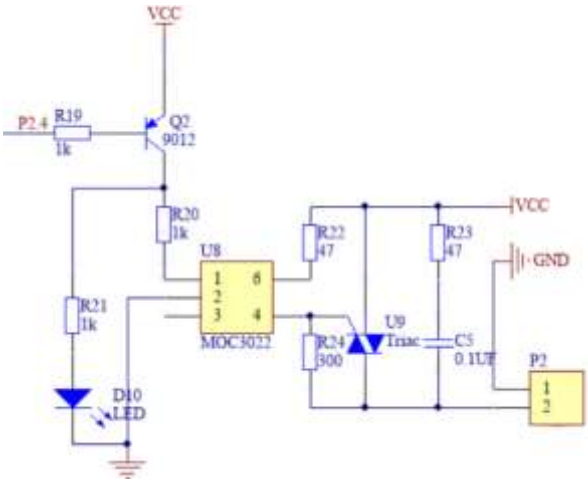

Figure 7. Control circuit of dust collecting motor

4. System Software Design

The main program part of the robot includes the initialization program of the system components, the remote control receiving program, the obstacle avoidance program, the tracking program and the dust collection logic control program. The main program design process is to initialize the system after the MCU is powered on. The initialization content includes the initialization of MCU register, the initialization of system variables, and the

ISSN: 2688-8645

initialization of system variables After the completion of initialization, the system enters the while cycle for real-time infrared remote control signal acquisition. When the infrared remote control signal changes the working state of the system, it makes control command adjustment. The main program flow chart is shown in Figure 8.

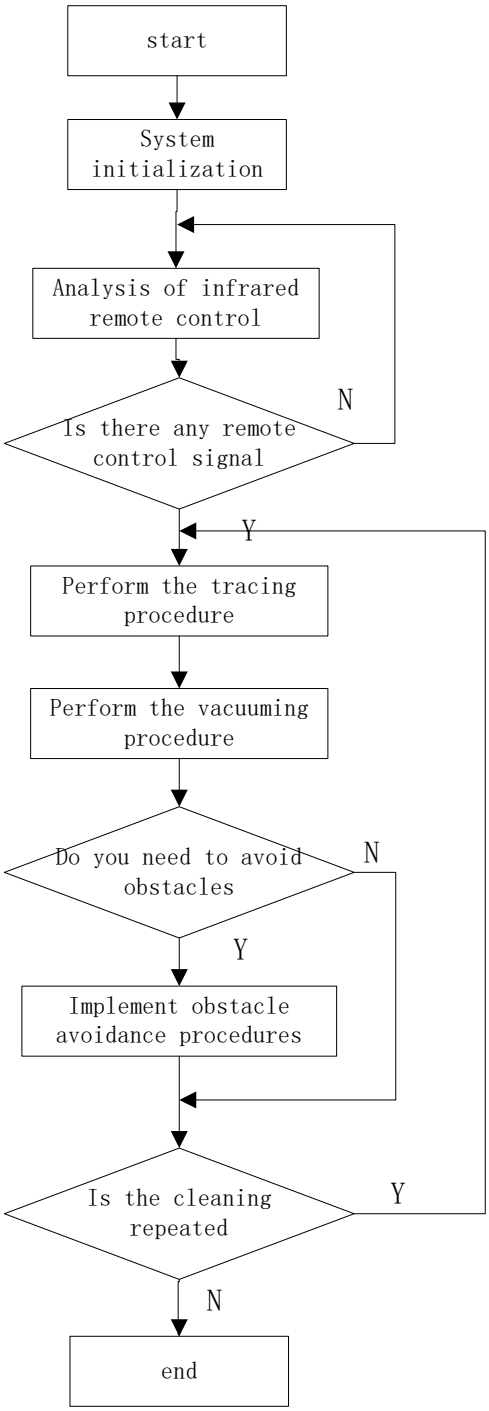

Figure 8. Main program flow chart

5. Conclusion

The intelligent vacuum cleaner designed in this paper uses ultrasonic sensor to detect obstacles, combined with the control function of single-chip microcomputer, drives the stepper motor through the driver to realize the functions of walking and turning, which can replace the human to realize the automatic cleaning and obstacle avoidance functions. With the characteristics of intelligence, efficiency, portability and dexterity, it is a trend of the development of artificial

ISSN: 2688-8645

intelligence. In the near future, with the improvement of living standards, its application will be popularized.

References

[1] Tang Yixie, Zhou Liang, Wei Zeyu, Wu Zhihui, Dong Qing. Design and production of multifunctional sweeping robot [J]. Science and technology wind, 2018, (19): 12.

[2] Li Zhihua. Research on embedded vacuum cleaner based on artificial intelligence technology [J]. Electronic production, 2014, (09): 67-68.

[3] Sun Lihui. Design of intelligent vacuum cleaner control system based on MCU [J]. Electronic world, 2013, (21): 33-34.