ISSN: 2688-8645

Frequency Conversion Constant Pressure Water Supply System based on Serial Communication between PLC and Inverter

Xin Qian

Suzhou Vocational Institute of Industrial Technology , Suzhou 215104, China.

Abstract

The traditional water tower, high-level water tank, air pressure pressurization and other equipment are used in the water supply systems of domestic water, industrial water, various water plants, oil fields, boilers, constant pressure water supply, spray and fire protection, which not only covers a large area and investment in equipment, but also is difficult to maintain, and can not meet the requirements of high-rise buildings, industrial, fire-fighting and other high-pressure, large flow of rapid water supply Demand. On the other hand, due to the randomness of water supply, it is difficult to ensure the real-time performance of water supply by using traditional methods. Moreover, the selection of water pump is often determined by the maximum water supply, but the peak water consumption time is short, so the pump has a large margin in a long period of time, which not only has low pump efficiency and unstable water supply pressure, but also causes a lot of power waste. This paper introduces a variable frequency constant pressure water supply system controlled by PLC. It can not only solve the complicated labor and mental pressure of manual operation, but also save energy.

Keywords

PLC; Frequency converter; Frequency conversion; Constant pressure water supply.

1. Introduction

The constant pressure water supply control system is composed of PLC controller, touch screen display, frequency converter, pressure transmitter, water level transmitter, AC contactor and other electrical control equipment, three water pumps (the number of water pumps can be set as required) and a small flow pump, as shown in Figure 1.

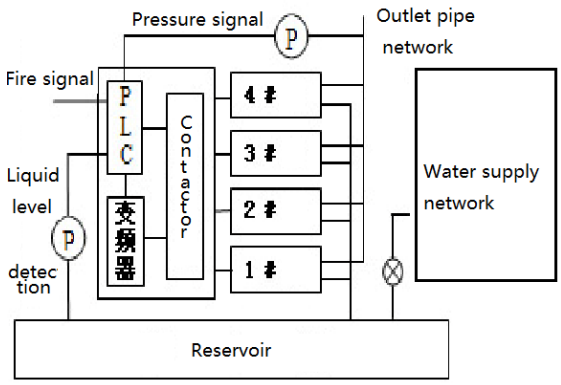

Figure 1. System structure diagram

A pressure transmitter is installed on the main outlet pipe of the water supply system to detect the outlet pressure, and a liquid level transmitter is installed in the reservoir. The PLC has an analog input detection module to detect the 4-20mA signal output from the pressure

ISSN: 2688-8645

transmitter and the liquid level transmitter. After PID calculation, the detected pressure signal and the set pressure signal are adjusted by controlling the output frequency of the frequency converter to adjust the motor speed With the constant water supply pressure, a closed-loop pressure system based on the set pressure is formed; the water level signal of the pool is automatically detected and compared with the set low water level limit, and the alarm signal of low water level is output or the machine is shut down directly. The touch screen display can display the power supply voltage, current, frequency converter output frequency, actual water supply pressure, set water supply pressure and the working state of each pump, etc.; through the touch screen, the set water supply pressure can be modified online and the operation of the water pump can be controlled. The system also has a variety of protection functions, especially the strong current logic hardware interlock function, so as to ensure normal water supply and can be unattended.

2. Working Principle of the System

The system has two operation modes: manual and automatic

(1) When the manual operation mode is selected, press the start button or stop button to start and stop the pumps according to the needs. This method is only used for maintenance or control system failure.

(2) Automatic operation mode When starting the operation under the automatic operation mode, the water level of the pool is detected first. If the water level of the pool meets the requirements of the set water level, the frequency conversion AC contactor of the 1 ๑ pump is closed, the motor is connected with the frequency converter, and the output frequency of the frequency converter starts to rise from 0 Hz. At this time, the pressure transmitter detects the pressure signal and feeds back to PLC, and the PLC controls the frequency output of the frequency converter after PID calculation; If the pressure is not enough, the frequency will rise to 50 Hz. After a certain time delay, the 1 ๑ pump will be switched to the power frequency, the 2 ๑ pump will be closed by the frequency conversion AC contactor, and the frequency will be gradually increased until the outlet pressure reaches the set pressure, and so on.

If the water consumption decreases and the outlet pressure exceeds the set pressure, PLC controls the frequency converter to reduce the output frequency and reduce the water output to stabilize the outlet pressure. If the output frequency of the frequency converter is lower than a certain set value (water frequency, generally 25Hz), and the outlet pressure is still higher than the set pressure value, PLC will start timing. If the water outlet pressure is reduced to the set pressure within a certain period of time, PLC will give up timing and continue the variable frequency speed regulation operation; If the outlet pressure is still higher than the set pressure within a certain period of time, PLC will stop the power frequency pump with the longest running time among the running pumps according to the principle of "put into operation first and stop first" until the outlet pressure reaches the set value.

For residential water supply or other water supply systems with strong periodicity, a small flow pump can be set. For example, from 12:00 p.m. to 5:00 a.m., there is little domestic water for residents. In order to maintain the water supply pressure, a 30kW water pump also needs to work at 25Hz for a long time. The motor not only consumes more than ten kilowatts of electric energy, but also works at low frequency for a long time, which greatly affects the service life of the motor. If a 5kW small flow water pump is set up in the system, in order to maintain the water outlet pressure, the small flow pump frequency conversion work, not only the motor works at a higher frequency, but also consumes a small amount of electric energy. In the selection of small flow pump, its power is generally 1 / 4 to 1 / 6 of the main pump power, and the head is the same as the main pump.

ISSN: 2688-8645

In the process of automatic water supply, PLC detects the water level in real time. If the water level is lower than the set alarm level, the buzzer will send out water shortage alarm signal; if the water level is lower than the set shutdown water level, all pumps will be stopped to prevent dry pumping, and the shutdown alarm signal will be sent out; if the water level of the pool is higher than the set upper limit water level, the electric valve of water supply pipe in the pool will be automatically shut off.

Sometimes the power supply will be cut off suddenly. If no one is on duty, if the system can not be started after the power supply is restored, the water supply will be cut off. After the power supply is restored, the PLC will send out a command, the buzzer will give a warning, and then start the 1 ๑ pump according to the automatic operation mode, until it runs stably at the given water pressure value.

Frequency conversion fault is considered from the principle of redundancy design, in case of failure, uninterrupted water supply. When the frequency converter breaks down suddenly, the buzzer will give an alarm, and the PLC will send a command to stop all the water pumps, and then the 1 × 10 pump will run at power frequency (if the power of the water pump is greater than 37 kW, the step-down start-up or other start-up modes will be adopted). After a certain delay, the 2 × 10 pump will be operated at power frequency according to the pressure change. At this time, the PLC switch pump will switch between the power frequency pumps according to the actual water pressure change. When there is no water tank shutdown, motor under voltage, over-voltage, wrong phase, motor fault and other conditions, the buzzer can send out an alarm. When conditions permit, the modem module can be added. When the frequency converter or motor fails, the operator on duty can be called through the remote communication port to inform the relevant personnel to come for maintenance. After all faults are solved and restored to normal, the alarm signal shall be sent out before starting.

3. Control System Configuration and Software Programming

3.1. Hardware Configuration of Control System

The PLC adopts Siemens S7-200 series cpu-226 host, with 40 I / O points (24 input points and 16 output points), 2 RS-485 communication / programming ports, PPI communication protocol, MPI communication protocol and free mode communication ability. Free communication port mode is a special function of S7-200 PLC, which enables the communication protocol of S7-200 PLC to be defined by users. In this system, PLC can be easily connected with frequency converter and touch screen. The analog input adopts EM231 module with 4-channel 12 bit a / D analog input, which has high precision. PLC programming adopts STEP7 micro / win programming software. It provides a complete programming environment, which can be used for offline programming, online connection and debugging, and can realize the conversion between ladder diagram and statement table.

In the traditional frequency conversion control system, the start / stop is controlled by PLC through the switch output, and the frequency is controlled by the PLC through the analog output port to output 0 ~ 5 (10) V or 4 ~ 20 mA signal, so it is necessary to purchase the expensive analog output port module of PLC. The fault detection of frequency converter is only to read the fault alarm contact of frequency converter by PLC, and only know that the frequency converter is in fault, but the specific fault is not clear. The operator can know by inquiring the alarm information of frequency converter and reading the instruction manual of frequency converter. The main control loop of the system is shown in Figure 2.

ISSN: 2688-8645

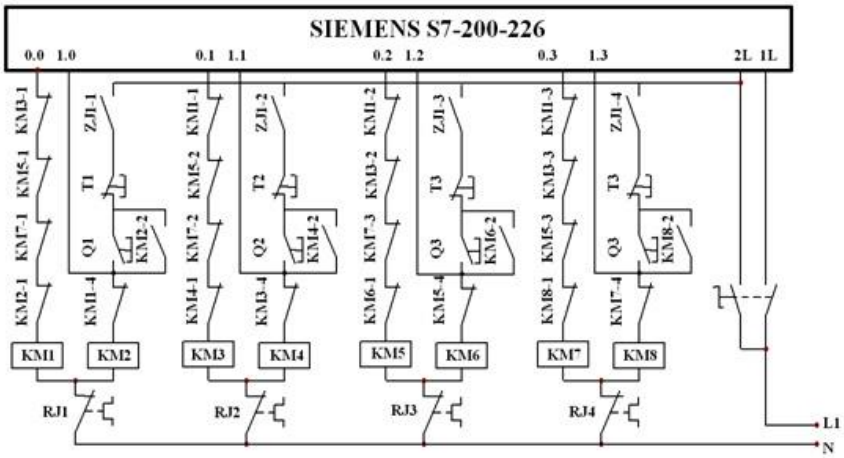

Figure 2. Main control loop of the system

3.2. PLC Software Programming

In the main program, PLC is powered on initially to detect the status information of each part of the system. If there is alarm information, it will first send out a warning. If there is no alarm information, it will start from the 1 ๑ pump (if the 1 ๑ pump is cut out of the system, it will start from the online pump with the smallest pump number), detect the water pressure in real time and carry out PID calculation to control the output frequency of frequency converter to keep the water supply pressure constant; If the frequency of the frequency converter reaches 50 Hz and the outlet pressure is still lower than the set pressure after a few seconds delay, switch the 1 ๑ pump to the power frequency, and start the 2 ๑ pump by frequency conversion to keep the pressure constant, and so on. If the outlet pressure exceeds the set pressure, the frequency converter reduces the output frequency to stabilize the outlet pressure. If the frequency converter is lower than the set value of the water outlet pressure first, and then stop the water pump according to the principle that the output water pressure of the water pump is still higher than the set value of the frequency converter, if the water outlet pressure is still lower than the set value of the water pump for a long time. If only one water pump operates at variable frequency and the frequency is lower than the set water frequency for a continuous period of time, the main pump with variable frequency operation is cut off and the small flow pump is put into operation, which not only protects the main pump motor but also saves energy.

Conclusion in the water supply system, variable frequency speed regulation mode is adopted, which can automatically adjust the speed of the pump motor or add or subtract the pump according to the change of actual water pressure, so as to realize constant pressure water supply, save energy and reduce consumption; small flow pump is added in the system to prolong the service life of the main pump motor. After the inverter fails, it can still run automatically, basically ensuring uninterrupted water supply, and using PLC to communicate with the transducer to control the operation of the inverter, it has certain advanced nature. At present, more than ten sets of the system have been put into use, the operation is good, the operation is intuitive and convenient, and the energy saving effect is obvious, which is well received by users.

References

[1] Yu Guoliang. Principle and application of PLC (Mitsubishi FX Series) [M]. Beijing: Tsinghua University Press, 2005.

[2] Piasecki, Dave.Warehouse Management Systems.World Trade,Vol.17 Issue 6,2005.